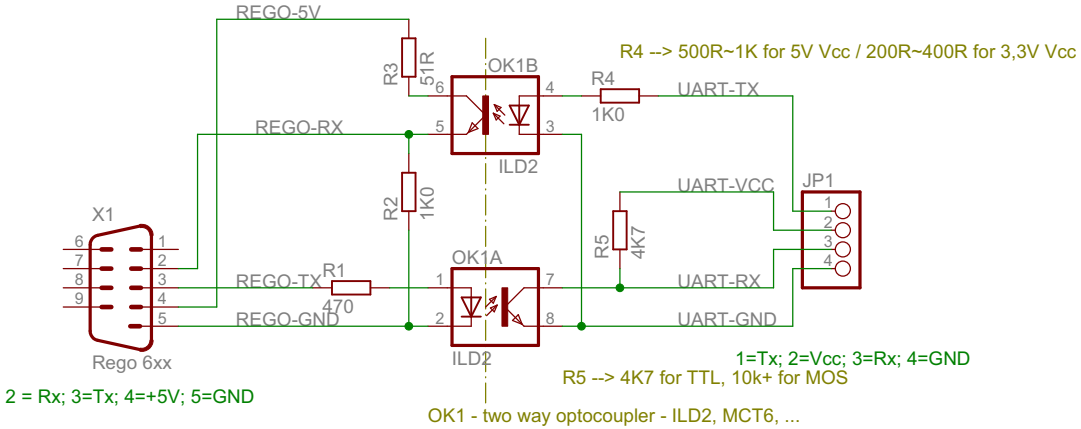
REGO-5V
R3
51R
OK1B
R4 --> 500R~1K for 5V Vcc / 200R~400R for 3,3V Vcc
R4
1K0
UART-TX
REGO-RX
ILD2
R2
1K0
UART-VCC
JP1
X1
R5
4K7
OK1A
REGO-TX
R1
470
UART-RX
REGO-GND
UART-GND
Rego 6xx
ILD2
1=Tx; 2=Vcc; 3=Rx; 4=GND
R5 --> 4K7 for TTL, 10k+ for MOS
2 = Rx; 3=Tx; 4=+5V; 5=GND
OK1 - two way optocoupler - ILD2, MCT6, ...