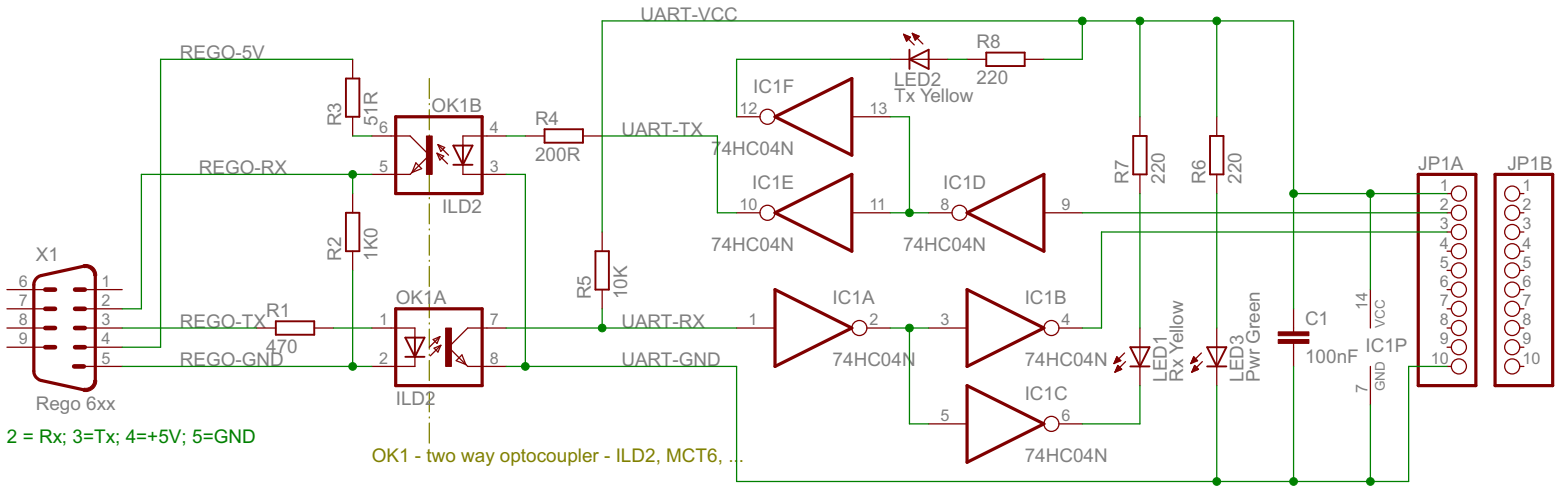

2.4.2009 10:32:05 D:\$user\eagle\IVT\ivt_plc_b.sch (Sheet: 1/1)